4

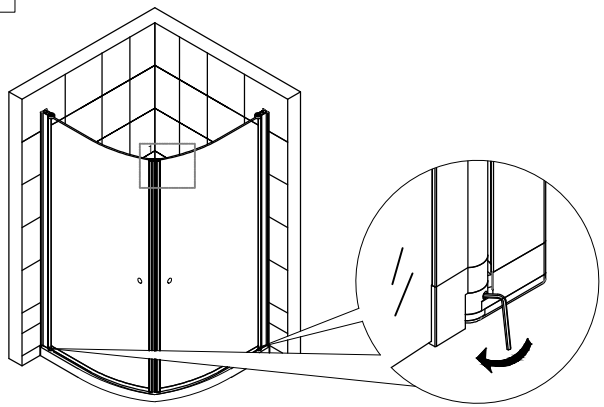

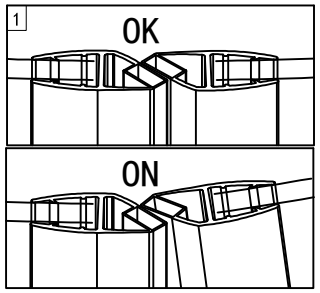

Ⓕ X2

5

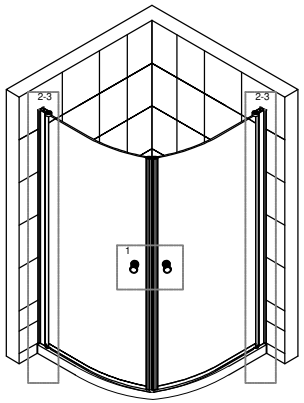

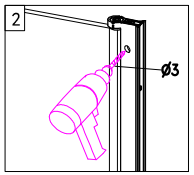

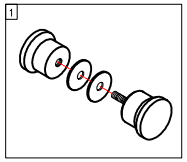

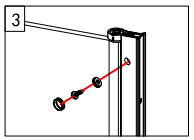

Ⓔ X2 Ⓒ X6 Ⓓ X6

6

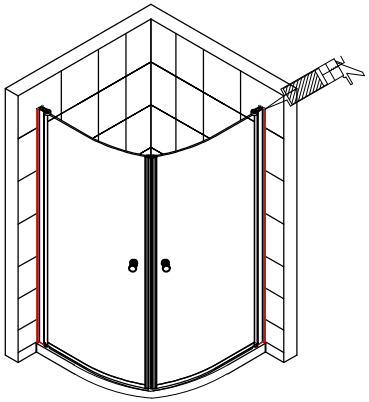

DOUCHE ANGLE OPEN

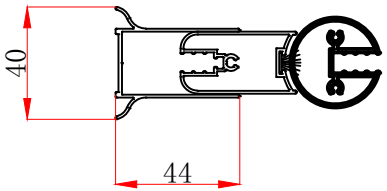

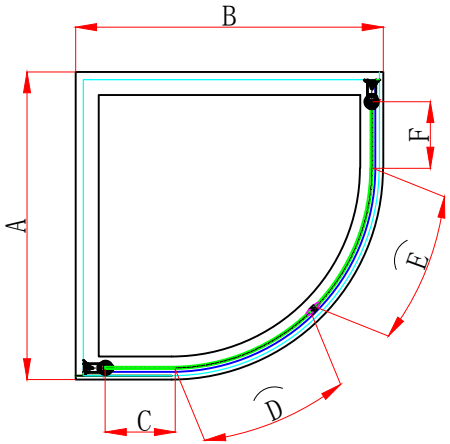

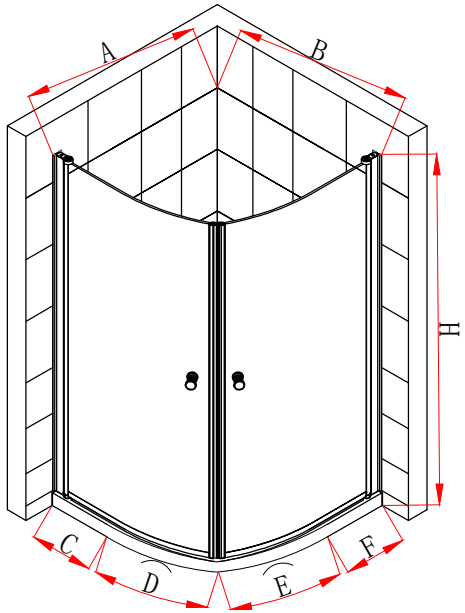

Unit:(mm)

A	B	C	D	E	F	H
800	800	182	⌒395	⌒395	182	1950
900	900	282	⌒395	⌒395	282	1950

Adjustable 800mm (770mm-790mm)
Adjustable 900mm (870mm-890mm)

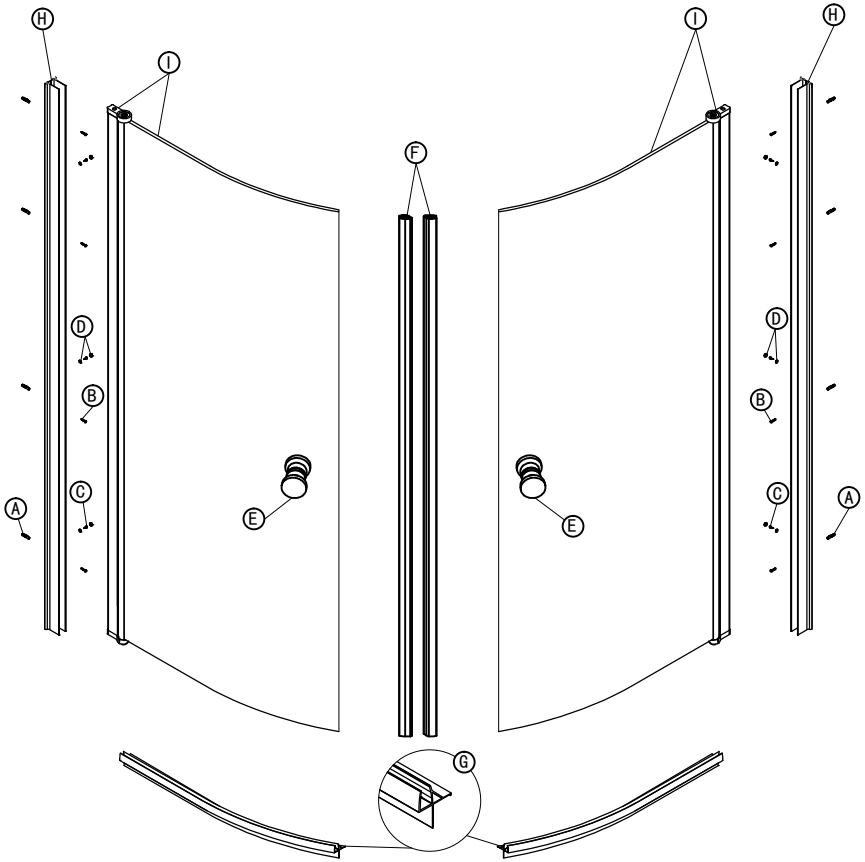
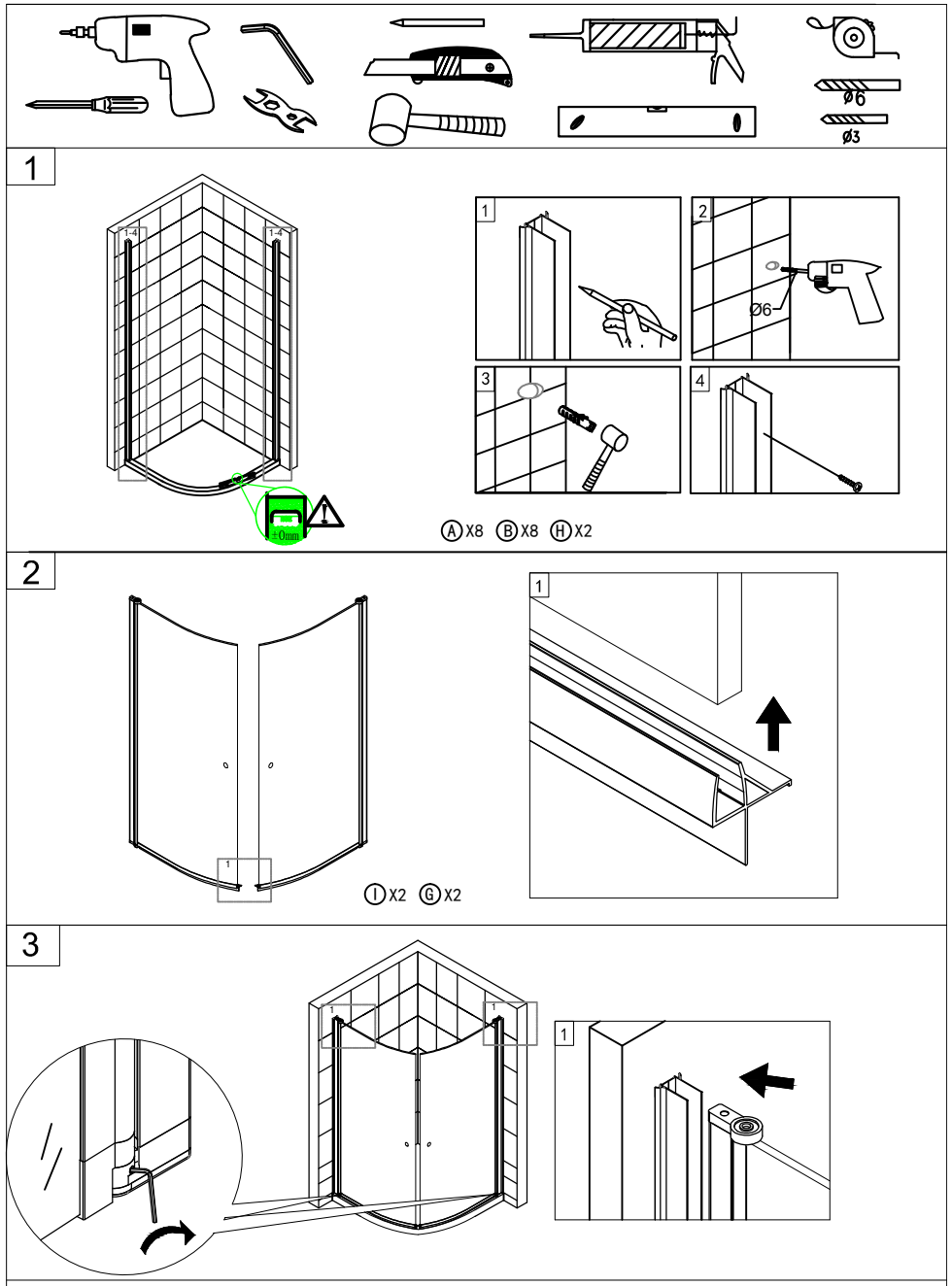
A X8	B 30 ST4 X8	C 12 ST4.0 X6	D X6	E X2	F X2
G X2	H X2	I X2